Ra at a t a t a tat a a at t a.

St a at a b a a ab t t , b a at , t at , a a at .

It a t a a at a t a , t t a b tt a a .

A a at t t a CATCHMENT AREA, a a COLLECTION a STORAGE a t .

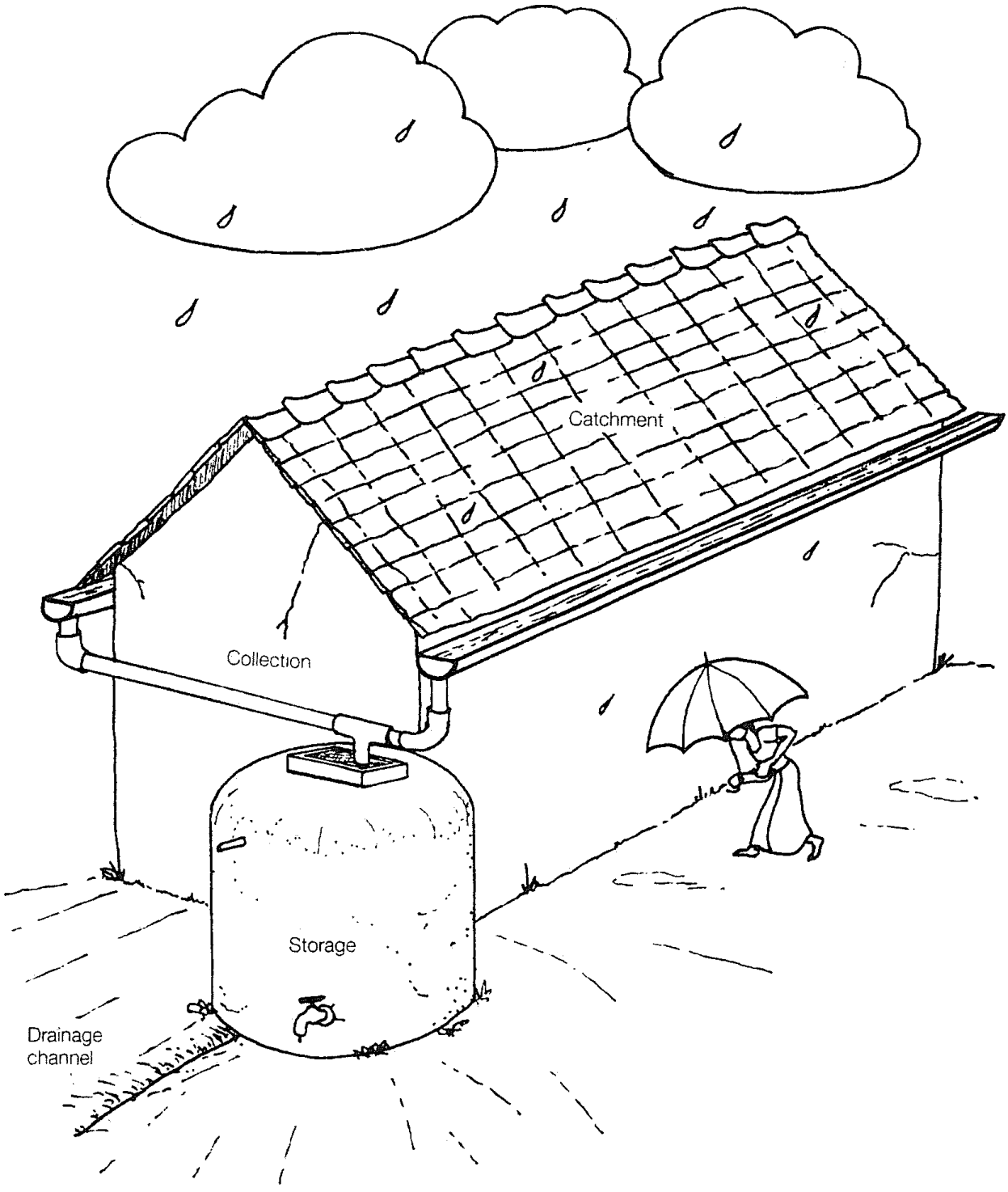

Catchment

T at t a a b a a a a .

Roof catchment:

C at a t . T a a , ab a a a ta . C t a a b k t b t a at a a t , a t t t at . H , at t t at a a a ta at . A t t t a t t t at . T ta t a t at .

C t a at a t a t a t a at a t a t a t a t t t a t a t .

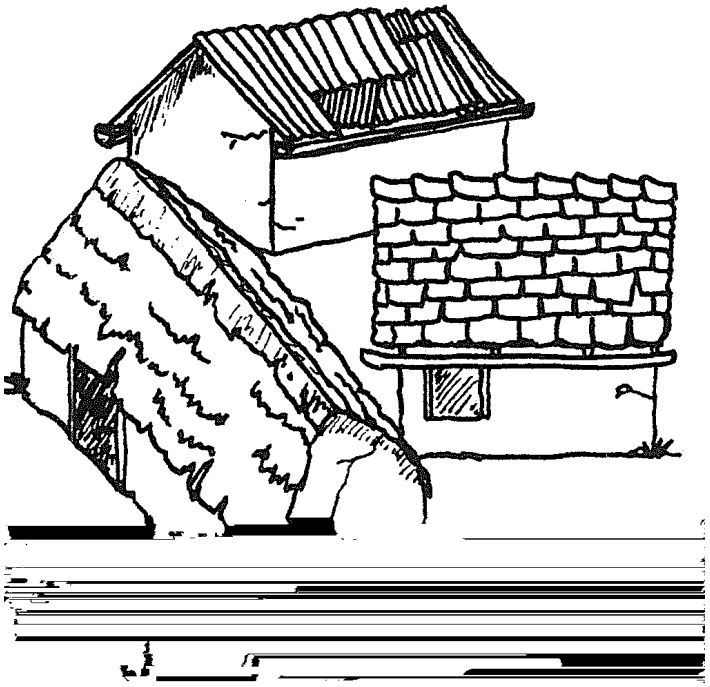

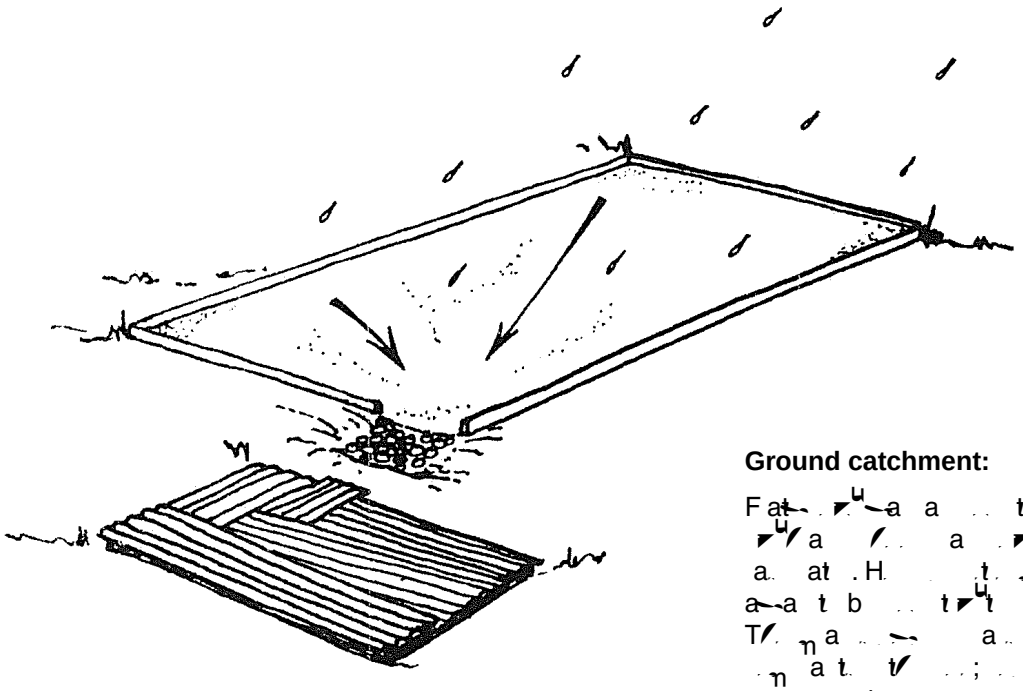

Ground catchment:

F at a a t t t , a a a t a at . H t a a at t a a t b t t b a a t t a . T a a tat ; t a a t t ; t a a t a t, t , a at a , a tab b at a .

U a at t a a a b t a t a t a t a at t . T a a b ab t b , a a at t at t a a ab , at t t a b at a att .

Collection

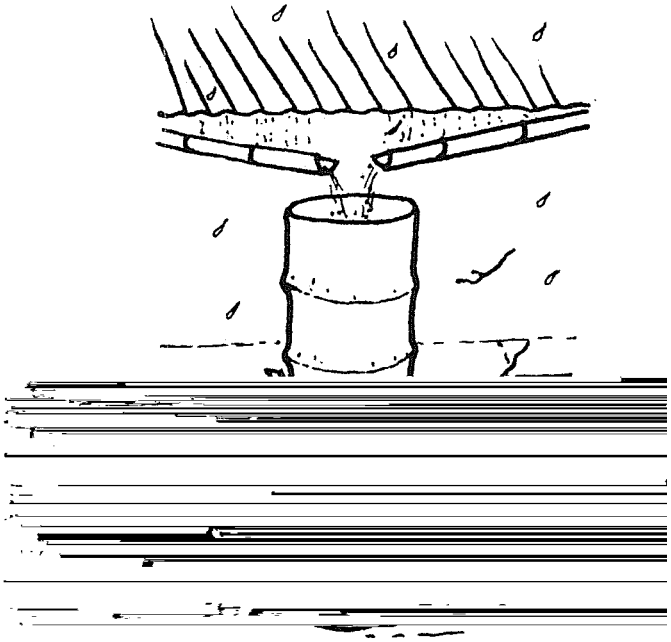

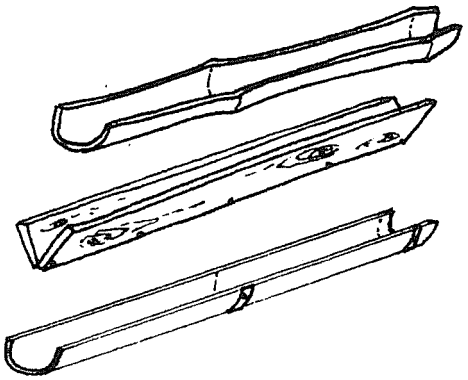

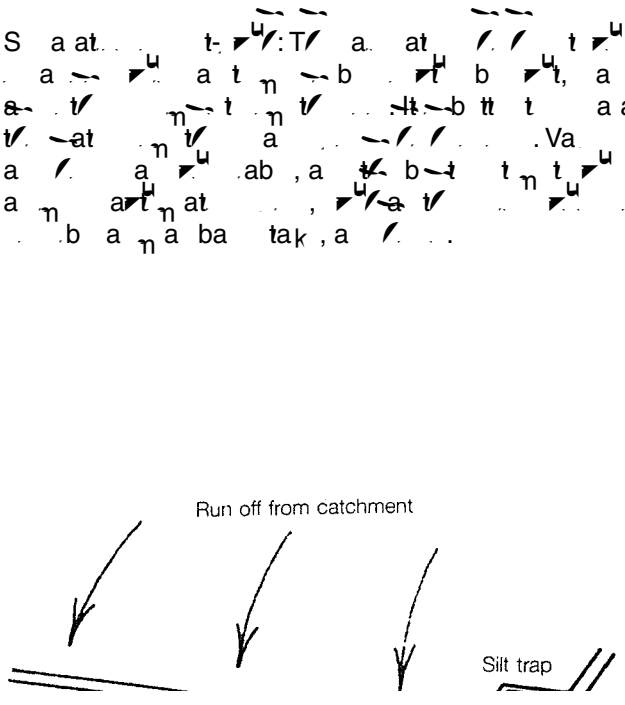
Run off from catchment
Silt trap

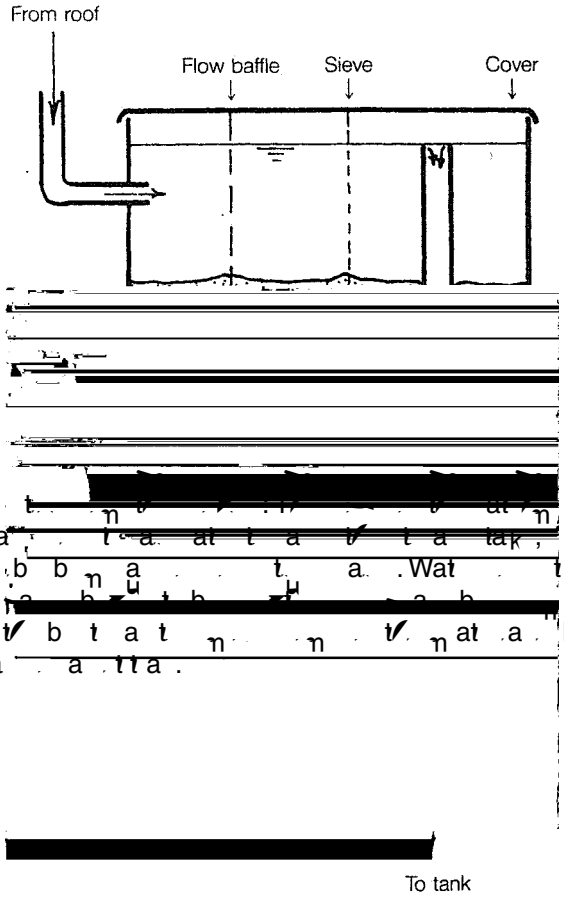
From roof
Flow baffle
Sieve
Cover
To tank
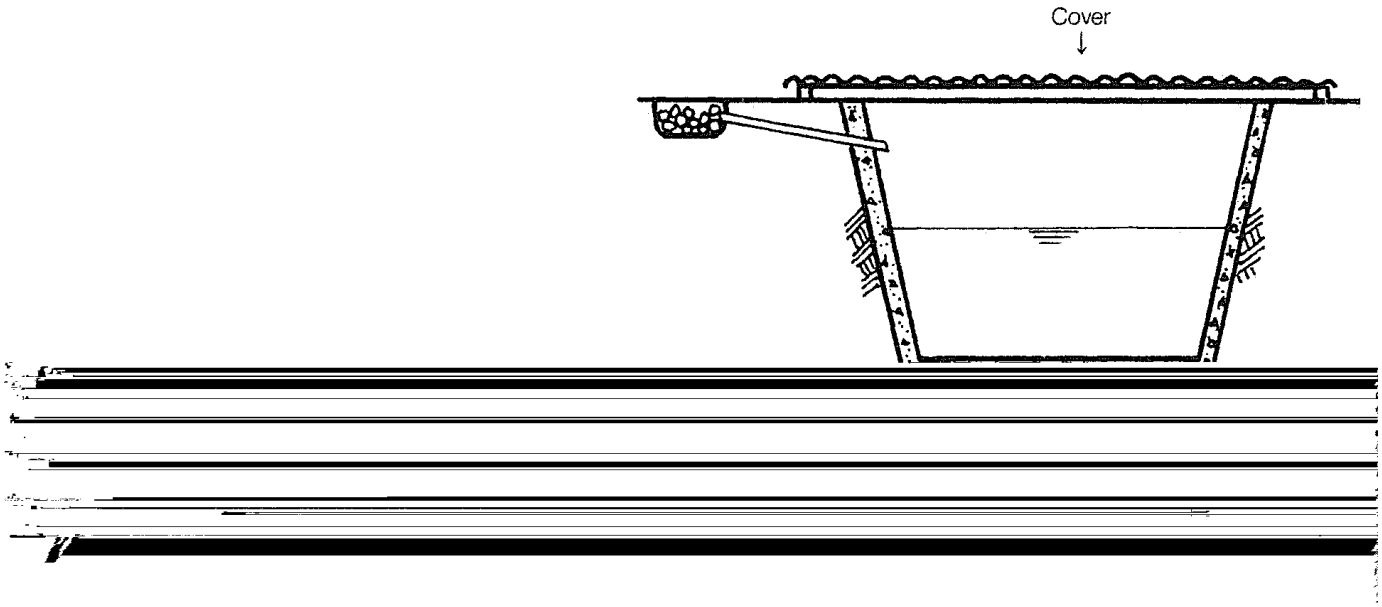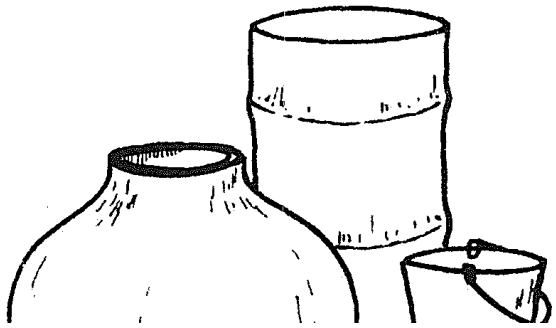
Storage